MANLY

CODE for the PROTECTION of BUILDINGS AGAINST TERMITE ATTACK

Manly Council, 1996

prepared by Environmental Services Division

MANLY

CODE for the PROTECTION of BUILDINGS AGAINST TERMITE ATTACK

Date of Adoption - 4th June, 1996

Date of Enforcement - 4th June, 1996

Manly Council, 1996

prepared by Environmental Services Division

PREFACE

Organochlorines are very persistent synthetic compounds which were widely used to protect buildings from termite attack.

However, it is this persistency that has resulted in contamination of the environment.

Concern regarding the effect of organochlorines on human health resulted from the action of these compounds on the body's immune system and their tendency to accumulate in fatty tissue, with possible carcinogenic and mutagenic effects.

This Code has been prepared to provide information to home owners, architects, builders and others on methods which may be used to protect homes from termite attack in an effective and environmentally responsible manner.

Manly Council is committed to providing a safe and healthy environment for its residents through proper management and providing an integrated approach to development and environmental health.

TABLE OF CONTENTS

INTRODUCTION

Damage to the structure of a building through subterranean termite activity can be a very expensive building fault to rectify and restore. Most building insurance policies, particularly single dwelling insurance policies, exclude damage caused by vermin and/or subterranean termites.

As of 30th June, 1995, the use of organochlorines as a soil treatment to minimise the risk to buildings from subterranean attack by termites has been prohibited.

The requirements for protection against termites has been addressed through the development of the Australian Standard: 3660.1 “Protection of Buildings from Subterranean Termites - New Buildings” (AS 3660.1). The Building Code of Australia (B.C.A.) requires compliance with AS 3660.1 and also requires protection from termites “where a structural member is subject to attack by subterranean termites”.

Where termite protection systems are to be installed in a building, adequate consultation between the designer, builder and owner of the proposed building should occur prior to construction. A basic knowledge of the habits of subterranean termites along with sound building practice and attention to details, particularly in the substructure, will assist the architect, designer, builder and owner to avoid practices which may render barrier systems ineffective.

The following information explains Council’s requirements for the approved methods of protection of new buildings against subterranean termites. This Code will be revised upon the release of AS 3660.2 which includes protection for existing buildings.

1. GENERAL BUILDING CODE OF AUSTRALIA PROVISIONS

The Building Code of Australia (B.C.A.) relies upon the requirements of Australian Standards 3660.1, "Protection of Buildings from Subterranean Termites Part 1: New Buildings". This Standard also details the requirements of maintenance of the termite barrier/shield depending upon whether it is a chemical or mechanical barrier or shield.

AS 3660.1 places emphasis on a three part system for the effective protection against termite attack, and, as with any system, its overall effectiveness will depend upon these three systems functioning correctly:

1. Correct installation of the barrier.
2. Regular competent inspection of the barrier.
3. Adequate maintenance of the barrier.

Whilst the B.C.A. does not regulate for protection against termite attack on non-structural members, protection must be considered to protect those other members that are susceptible to termite attack, eg. if the building consists of brick load bearing walls that are considered to be termite resistant and the roof is made of timber members susceptible to termite attack, termite protection would be required. It should be appreciated that the requirement in the B.C.A. is the minimum acceptable level of protection and owners of buildings may choose to incorporate additional termite protection systems in their buildings if they consider it necessary.

2. SELECTED ALTERNATIVES TO ORGANOCHLORINES

The use of organochlorines as a termiticide was withdrawn from use throughout Australia from 30 June, 1995. This ban has resulted in the development of newer and safer alternative methods to inhibit termite attack, viz:

(i) Chemical treatment - approved and registered for pre- and post-construction termite control by the National Registration Authority for Agricultural & Veterinary Chemicals (N.R.A.).

(ii) The use of physical shielding materials as described in AS 3660.1.

The available methods should each be assessed for suitability to the circumstances of the project.

3. GENERAL SITE REQUIREMENTS FOR TERMITE PROTECTION

There are a number of procedures that can be implemented prior to, and in association with, any building practices and physical or chemical barrier system to reduce the susceptibility of a building to termites. These include:

(a) Any active nest containing significant termites within the property boundaries and up to a distance of 50 metres from the proposed building should be eliminated prior to construction.

> Note: it is strongly recommended that the area of the proposed building site be inspected by a licensed pest/property inspector prior to construction.

(b) All tree roots which have been exposed during excavation, tree stumps, logs and timber shall be removed from the site. Removal of trees shall be subject to Council's Tree Preservation Order.

> Note: Grinding with a stump grinder is not sufficient as root fibres act as highways bringing termites into the building.

(c) All timber cut-offs, building debris, removable formwork and other materials containing cellulose (eg. set out pegs and profiles, cardboard and paper) shall be removed from the site, after completion of building works.

(d) It is important to ensure that the subfloor area below a suspended floor is graded and drained to prevent the ponding of water under buildings, and that drainage is designed such that moisture does not pool around the building during and after construction, as this would attract termites to the building.

(e) Attachments to buildings including steps, patios, pergolas, inground timbers, verandahs, stumps etc. should be separated by a clear gap of at least 40mm from the main structure.

4. APPROVED SYSTEMS

The following systems are a brief overview of what is contained in the Australian Standard 3660.1 - 1995 “Protection of Buildings from Subterranean Termites Part 1 - New Buildings”. These are the options from which you can choose:

4.1 Suspended floors

Suspended concrete or timber flooring systems with traditional ant capping are still permitted. Additional requirements include providing a 400mm subfloor space which allows for increased ventilation and sufficient room for a regular inspection by a competent pest inspector, and also minimises the chances of termites forming free-standing tunnels or tubes which run from the ground to the timbers directly. It is essential for an inspection to be requested prior to the floor being laid.

Ant caps are required to be installed as follows:

(a) All piers, walls, isolated piers or engaged piers need to have ant capping.

(b) Ant caps need to be soldered and not simply over-lapped or pop-riveted with a silicon sealant between the plates.

(c) Ant caps should be free from all perforations.

Note: Ant capping is required to provide a continuous barrier for protection, i.e. they need to extend the full width and length of the masonry. The capping prevents the termites from having direct access to floor timbers; tracks are more visible due to the indirect route.

Extract from AS 3660.1-1995

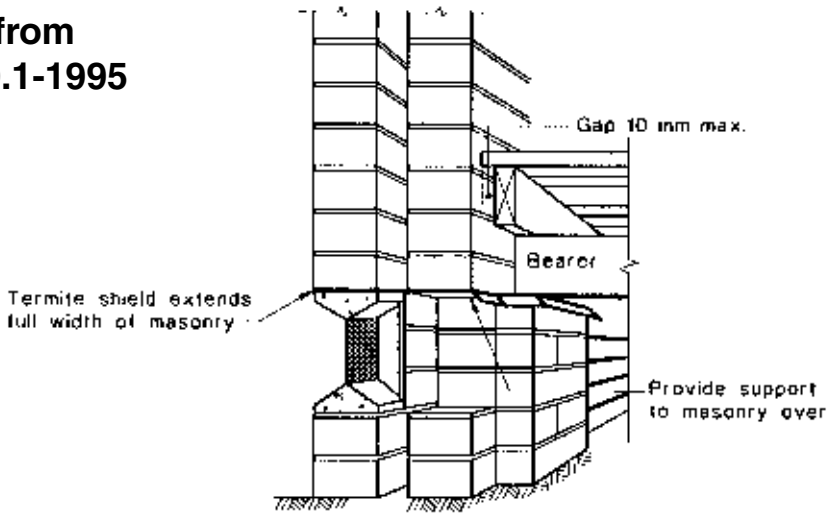

FIGURE 4.4 TERMITE SHIELDING FOR EXTERNAL BASE STRUCTURE

4.2 Protection of areas beneath and around a concrete slab

There are two main areas where termites may enter concrete slab on ground construction houses:
EITHER - through the slab itself - slab cracking (uncontrolled cracking of a concrete slab will ultimately reduce its effectiveness as a termite barrier).

OR - over the edge.

A concrete slab can be considered to be part of a barrier system if it is constructed strictly in accordance with AS 2870 “Residential slab and footings” which focuses on the way the slab is constructed to prevent uncontrolled shrinkage cracking, and thereby maintaining an effective barrier system.

Concrete slab construction has been divided into two categories as follows:-

(a) Monolithic slab: (Essentially a continuous slab from edge beam to edge beam.)

Where a monolithic slab is used, it will be necessary only to provide protection around penetrations - such as sewer pipes, and control joints (eg. stainless steel mesh or graded stone barriers), and to adopt protective measures at the slab edge (see below).

(b) Non-monolithic slab: (Essentially a footing and infill slab).

Protection is the same as for a monolithic slab, plus additional protection is required at the construction joint between each of the two concrete elements, which is considered to be a likely area for termites to gain access into the building.

Extract from AS 3660.1-1995

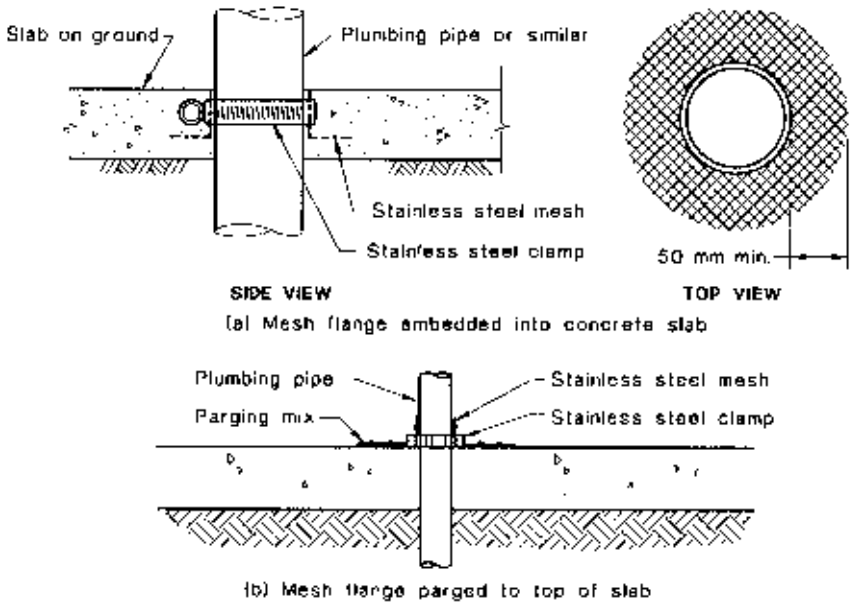

FIGURE 5.4 SERVICE PIPE PENETRATIONS

4.3 Slabs not forming part of the Termite Barrier

A concrete slab that is not designed to form an integral part of the termite barrier system will require the entire area beneath the slab to be protected by a chemical or a physical barrier consisting of graded stone or stainless steel mesh. Perimeter protection must also be provided (see Section 4.4 below).

4.4 Perimeter Protection

(a) An exposed clean edge of the concrete slab, measuring 75mm above adjoining ground level is required to provide an area for inspection. (This will identify if termites are attempting to access the building.) The effectiveness of this approach depends on the external exposed edge of the concrete being free of any imperfections, fixings or render that could conceal termite activity.

(b) Perimeter protection can also be achieved by partial stainless steel mesh or graded stone barriers (see 4.5 below), or

(c) Chemical perimeter protection with a chemical approved for that purpose by the National Registration Authority (NRA). Important consideration should be given to the replenishing of the chemical barrier as it will not provide protection for the economic life of the building. Special care should also be taken with the location of foot paths and driveways to ensure such replenishing can occur. Reticulation perimeter systems may be considered in the future, after accreditation of these systems.

4.5 Stainless Steel Mesh

Stainless steel mesh barriers may be installed under the whole of the slab as a full barrier, from one side all the way through to the other, or partially, to protect cracks, joints, service penetrations and cavity walls. Partial installation is the most common form of installation currently being used in Australia. It relies on the concrete slab remaining intact and preventing termite entry as a physical barrier. It protects vulnerable areas, such as around waste pipes or service pipes through the concrete slab, and protection within the building perimeter, which includes garage step down and patios.

Extract from AS 3660.1-1995

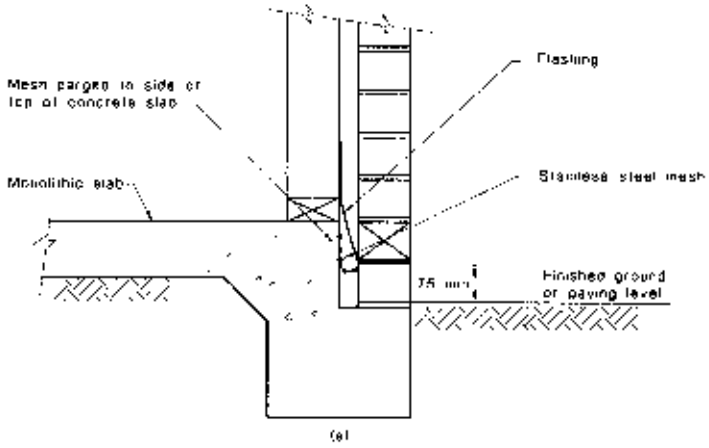

DIMENSIONS IN MILLIMETRES

FIGURE 5.2 (in part) INSTALLATION OF STAINLESS STEEL MESH IN MASONRY VENEER WALLS

Mesh is attached to service penetrations by a stainless steel hose clamp and a minimum of 100mm should be extended around the perimeter of each penetration. This is embedded within the concrete of the slab. With perimeter barriers the mesh is laid across the cavity wall and beneath the first course of bricks on either side of the cavity wall. The mesh is joined by folding a lapjoint, two and a half times on top of itself and parged onto the concrete slab to form an impenetrable barrier to termite entry.

> Note: Stainless steel mesh is required to be installed by an accredited installer.

4.6 Graded Stone Barriers

Graded granite barriers work under the premise that the individual stone chips are too large for the termites to pick up and remove. When packed together the gaps between the stone chips are insufficient for the termites to crawl through and stone is too hard for the termites to chew or dissolve. Site drainage is critical with this method, and it should not be used where drainage problems exist.

Where it is installed as a full barrier, it is sealed beneath the concrete slab from one side to the other at a minimum thickness of 150mm. It is then compacted to form a flexible and solid barrier from one side of the building to the other.

Extract from AS 3660.1-1995

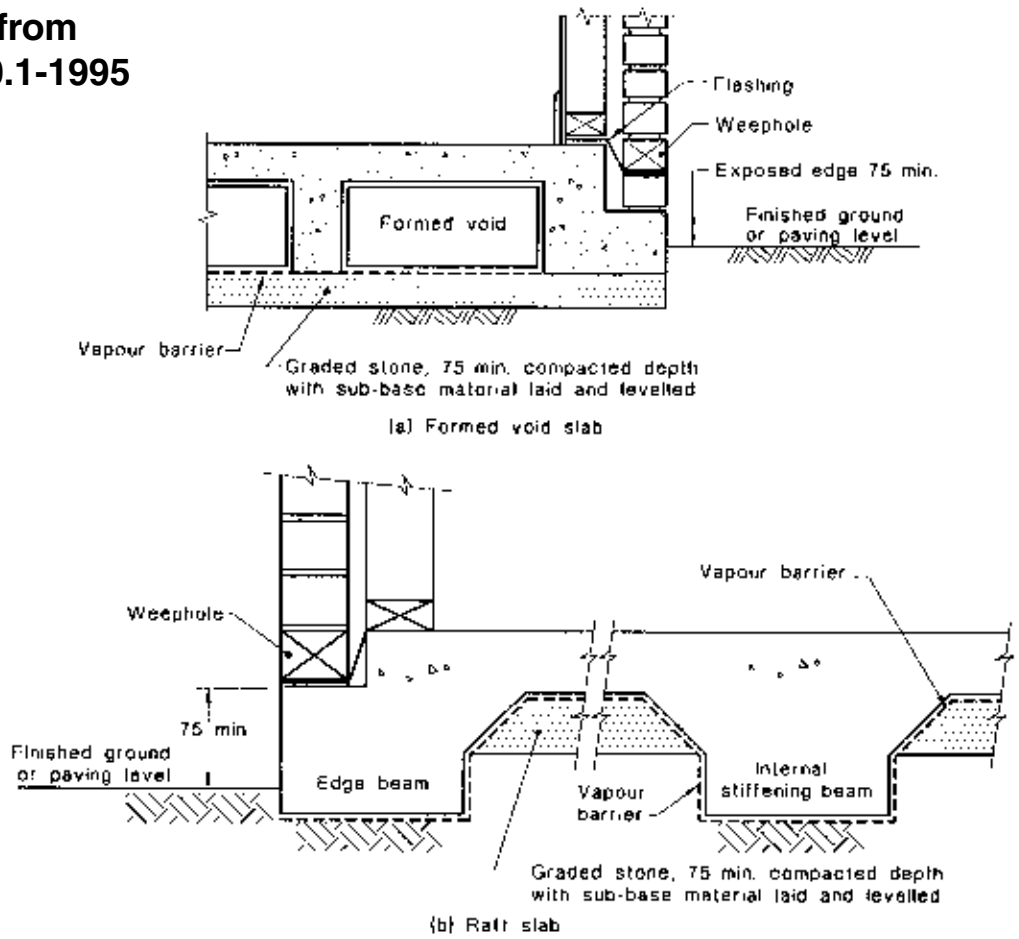

DIMENSIONS IN MILLIMETRES

FIGURE 6.1 TYPICAL INSTALLATION OF GRADED STONE UNDER SLAB-ON-GROUND CONSTRUCTION

Where this method is used around the perimeter of the house, a 100mm capping (concrete/paving) is required to be placed directly over it to prevent disturbance of the barrier. The slab edge exposure is not required with this system.

Partial treatment allows for perimeter protection of slabs by the placement of graded stone within the cavity of the external walls. This is done along the bottom brick course and is placed below cavity flashings. A 75mm edge exposure below the top of this barrier also applies (ie. from brick and not slab). Service penetrations must be protected by filling the void around the service pipe with graded stone to a minimum compacted depth of 75mm and a minimum width of 50mm. The top, bottom and ends of the resultant graded stone barrier shall be capped with durable jointing material to retain the integrity of the barrier and to prevent escape of graded stone particles.

> Note: It is stressed that termites can bridge or breach barrier methods and that thorough, regular inspections of the building are necessary.

4.7 Chemical Soil Barriers

(a) Beneath Slab Handspraying

Hand application involves the spraying of N.R.A. approved chemicals underneath and prior to pouring of the concrete slab. This system provides protection under the slab for a period of between 6 and 10 years. There is no method of reapplication other than core drilling the slab at 300-450mm centres and injecting the chemical under the slab.

Beneath slab handspraying is recommended on sites with known subterranean termite colonies for the extermination of the colonies prior to construction.

> Note: This method will not be approved by Council for use in isolation of other more persistent methods which offer protection for a reasonable period in the life of the building.

(b) Perimeter Handspraying:

The use of this form of chemical barrier will only be permitted where a system provides for retreatment without the need to alter the physical fabric or perimeter of the building and where efforts have been made to prevent the possibility of any human contact with the treated substrate. This system shall only be approved in conjunction with details as to the method of communicating to the property owner the requirement for replenishing of the chemical and the need to maintain the slab perimeter clear of paths etc.

5. INTEGRATION OF SYSTEMS

The Australian Standard 3660.1-1995 allows for the use of integrated systems for total termite protection of the dwelling; for example, a monolithic slab could be incorporated with a penetration protection, say, graded stone, and the slab perimeter could be protected with stainless steel mesh.

Problems can occur in determining the correct termite protection system where slab-on-ground construction is abutting existing suspended timber floor construction. In many instances, the protection of the connection of the two different sections of the building may be difficult, and a chemical barrier might well be the preferred method of protecting the area or joint where the different sections meet.

Concrete in-fill slabs placed on fill material can also cause problems if the fill is not clean and the edges of the slab are not appropriately treated with barriers. The height of the slab may mean that the fill material is above adjoining floor levels or other termite barriers and this can promote the travel of termites from the fill to other parts of the building.

6. TERMITE RESISTANT CONSTRUCTION

Under the requirements of Part B of the Building Code of Australia, Council cannot enforce the use of termite protection barriers where structural members are not subject to termite attack. Methods of construction incorporating, for example, steel frame construction satisfy the requirements of the Building Code of Australia, and therefore would not require a termite barrier. It is considered that this provides little comfort to the home owner who suffers a termite attack of decorative timbers, architraves, cupboards and similar non-structural elements within the building. Building control is a consideration beyond the mere structural elements.

Note: Council recommends that all new buildings incorporate “whole house protection” of termite control for the added protection of non-structural components of houses.

7. COUNCIL REQUIREMENTS

7.1 Pre-construction

Building applications submitted to Council will be required to provide informative details of the system of termite protection proposed to be used to provide whole of house protection inclusive of structural and non-structural elements.

Details must include:

1. The type of protection method(s) proposed.
2. Confirmation that the owner has been informed as to the type, durability and maintenance requirements relating to the particular termite protection system proposed. The owner should be made aware of all maintenance requirements.
3. Chemical perimeter soil barriers will only be permitted when satisfactory evidence is submitted to Council that the property owner is aware of the need to maintain access around the building for replenishment of the barrier.
4. Where the builder/developer is the owner at the time of application, the builder must provide a signed statement that the approved termite protection details and maintenance form will be provided to the subsequent owner.

   Note: A check sheet is provided for your information.

8. NOTICES

The Building Code of Australia and Australian Standard 3660.1-1995 require that a durable notice be permanently fixed to the building in a prominent location, such as at the entry to the subfloor area or the meter box to the building when a house is protected against termite infestation.

These are:

1. "The Non-chemical Methods - Termite Protection Notice" which details the non-chemical method of termite protection which has been used.
2. "Chemical Soil Treatment - Termite Protection Notice" which details chemical used, date of application, pest control company and their telephone number.

The applicant shall furnish to Council a statement as to the method of complying with (1) and (2) above.

9. OTHER CERTIFICATES WHICH COUNCIL WILL REQUIRE

9.1 Suspended Floors

A certificate of installation is to be provided by the installer for the ant capping or other system used in accordance with AS 3660.1-1995, in structures where an inspection has not been able to be carried out by Council's officers (ie. suspended concrete floors/patios).

9.2 Monolithic Slab

(a) A certificate that 20MPa concrete has been used.

(b) A statutory declaration by concrete supervisor or certificate from the consulting structural engineer indicating that the concrete has been adequately placed in accordance with AS 2870-1988 Residential Slabs and Footings.

(c) Owner builders are required to obtain a statutory declaration from their licensed sub-contractor in the form of the above.

(d) A certificate from the accredited installer for the partial system of treatment used around the pipe penetrations and perimeter of the building.

10. RESPONSIBILITIES OF OWNERS AND BUILDERS

In choosing a termite control method, Council recommends that all systems are considered. It is important to understand the workings of each system, the expected "life-span" of each system, type of construction proposed and cost of each system. Although a termite protection system may involve ease of application or less cost, the total cost over the economic life of a building may be greater than the original cost of a more expensive method. A slight change in building practice may also lead to major monetary savings.

Therefore, understanding all the information available and understanding the needs of each builder/owner are perhaps the most important aspects of choosing the right termite control.

Responsibilities of owner(s) and builder(s):

- The key responsibilities of the builder are:
  - to determine the appropriate method of providing protection to the building;
  - to ensure the method chosen is a building authority approved method;
  - to ensure the owner is advised of the proposed method of treatment;
  - to ensure the owner is advised that regular on-going maintenance/inspections is required to maintain the integrity of the protection system.
- The key responsibilities of the owner are:
  - to be aware of the treatment methods available to protect the building from attack by termites. This information is available from Council building surveyors, the Building Services Corporation or the pest control industry;
  - to ensure regular 6-12 monthly inspections are undertaken around the perimeter of the building;
  - to not complete any work around the building that may destroy the integrity of the termite protection system;
  - to insist on whole of house protection when having a new home or additions built.

The purpose of termite barriers is to impede and discourage termite entry into a building. It is stressed that all barrier systems can be breached and does not negate the need for regular inspections by a suitably qualified person at least annually.